1. The output and transfer dc current-voltage characteristics of one graphene field-effect transistor (GFET) are shown in Fig. 1. The channel width (W) is 5 µm, the gate length (L) is 0.7 µm, the oxide thickness (t_{ox}) is 5 nm, and the dielectric constant of the oxide ($\varepsilon_{r,ox}$) is 6.9.

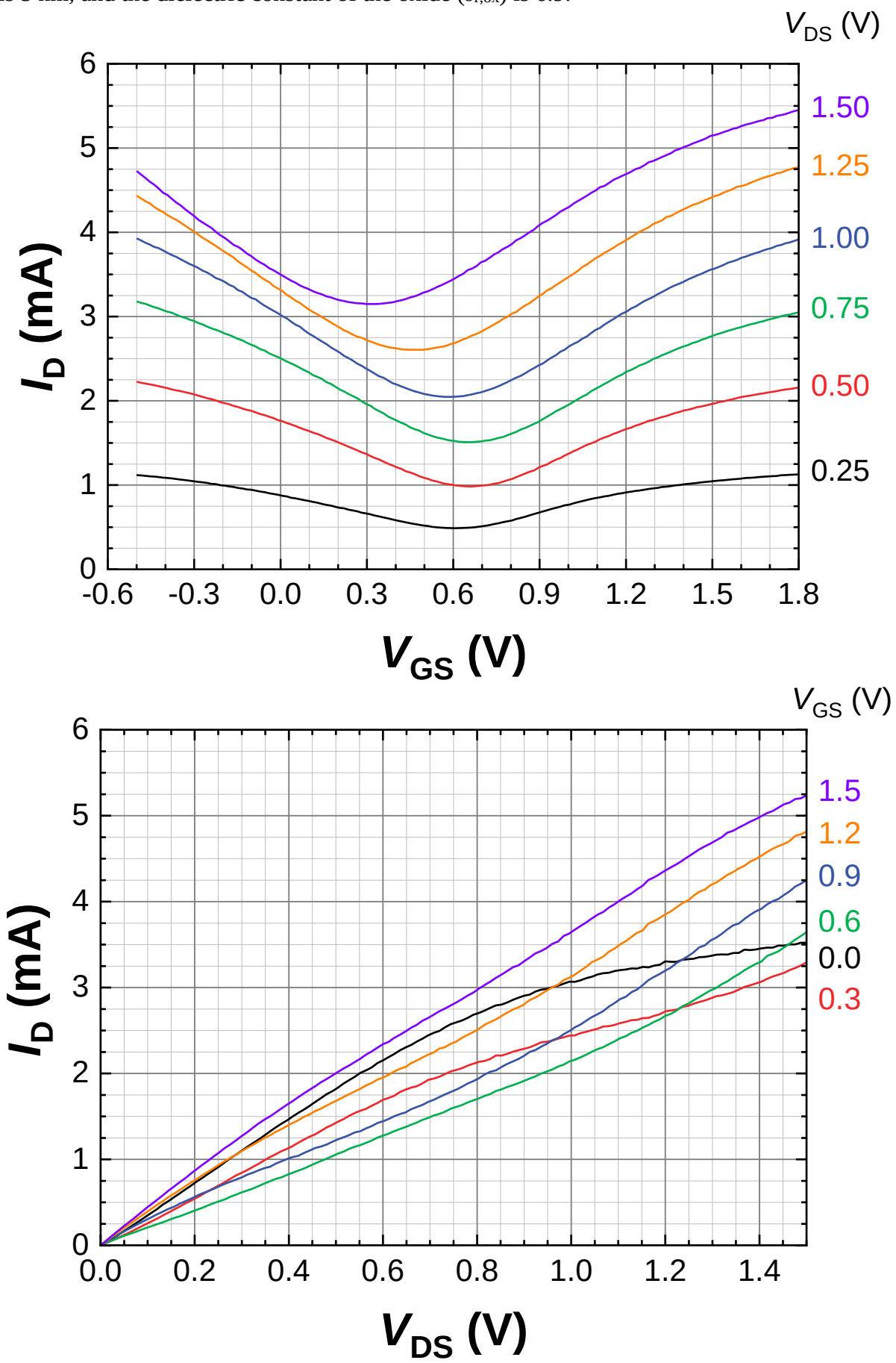

Figure 1 The dc current-voltage characteristics of a GFET. (top) Transfer characteristics. (bottom) Output characteristics.

Find numerical values for the intrinsic transistor gain $A = g_m/g_d$ (g_m is the transconductance and g_d, is the output conductance) of the GFET in the amplifier shown in Fig. 2 in the following three cases

(a) $V_{IN} = 0.0$ V,
(b) $V_{IN} = 0.6$ V,
(c) $V_{IN} = 1.2$ V,

if supply (V_{DD}) is 1 V and load (R_L) is 0 Ω. Use a ruler to find the derivatives. In which case the highest gain $|A|$ is obtained (comment on the location of the operating points)? Note: $\varepsilon_0 = 8.85\times10^{-12}$ F/m, $e = 1.6\times10^{-19}$ C.

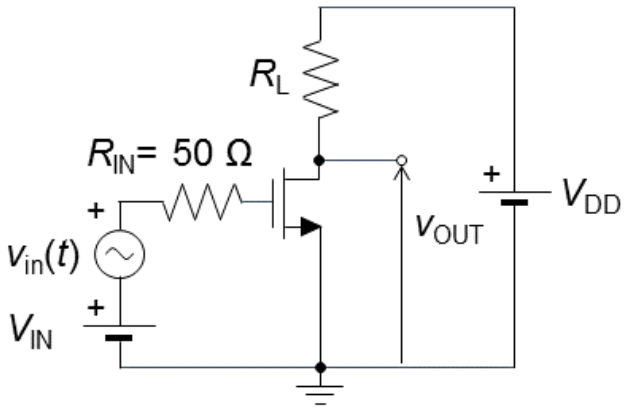

Figure 2 GFET in the common-source amplifier.

(d) Find the new location of the dc operating point if V_{IN} is as in the highest-gain case (a)/(b)/(c) and the load (R_L) is changed to 286 Ω.
(e) Find the low-frequency voltage gain $A_v = v_{out}/v_{in}$ in (d). Comment on the obtained value for A_v with respect to A obtained in the highest-gain case (a)/(b)/(c). Assume intrinsic GFET.
(f) Find new supply (V_{DD}) such that the operating point is identical to the operating point in the highest-gain case (a)/(b)/(c), if R_L and V_{IN} are the same as in (d). How much is A_v now?
(g) Plot the complete (extrinsic) ac small-signal circuit model of a GFET at high frequencies.
(h) Simplify model in (g) to obtain an intrinsic model at high frequencies. Find y parameters y_{11}, y_{12}, y_{21}, and y_{22} in this case.
(i) Express the intrinsic current gain h_{21} of a GFET via y parameters and derive its expression based on the result obtained in (h). Find the expression for the cut-off frequency f_T and calculate its numerical value in the highest-gain case (a)/(b)/(c).
(j) Find numerical values for the charge carrier velocity (v) and mobility (μ) based on the numerical value for f_T calculated in (i). Assume that the velocity is smaller than the saturation velocity (v_s).
(k) The unilateral power gain can be calculated as

$$G' = \frac{|y_{21} - y_{12}|^2}{4\left(\mathrm{Re}(y_{11})\,\mathrm{Re}(y_{22}) - \mathrm{Re}(y_{12})\,\mathrm{Re}(y_{21})\right)}$$

Find the maximum frequency of oscillation f_{max} based on the y parameters derived in (h).
(l) Simplify model in (g) to obtain an extrinsic model at high frequencies in which the only extrinsic parameter is the gate resistance ($R_G = 20$ Ω). Find y_{11} in this case.
(m) Find the expression for the unilateral power gain in (k) based on y_{11} in (l) and y_{12}, y_{21}, and y_{22} in (h). Find the expression for the maximum frequency of oscillation f_{max}, express it via f_T obtained in (j), and calculate its numerical value in the highest-gain case (a)/(b)/(c).

2. The Hamiltonian in graphene is

$$\mathbf{H}(\mathbf{k}) = \begin{bmatrix} 0 & -\gamma f(\mathbf{k}) \\ -\gamma f^*(\mathbf{k}) & 0 \end{bmatrix}$$

where

$$f(\mathbf{k}) = \sum_{i=1}^{3} e^{j\mathbf{k}\mathbf{u}_i}$$

$$\mathbf{u}_1 = a(0,1)$$

$$\mathbf{u}_2 = a(-\frac{\sqrt{3}}{2}, -\frac{1}{2})$$

$$\mathbf{u}_3 = a(\frac{\sqrt{3}}{2}, -\frac{1}{2})$$

Find the energy spectrum $E(\mathbf{k})$ in the vicinity of the K point

$$\mathbf{K} = \frac{4\pi}{a3\sqrt{3}}(1, 0)$$

3. Explain schematically how a resolution enhancement is achieved by using an alternating phase-shift mask in optical lithography.

Answers

1.

(a) $g_{\mathrm{m}} = -\dfrac{(4.25-2)\,\mathrm{mA}}{(0.5+0.6)\,\mathrm{V}} = -2\ \mathrm{mS} \quad g_{\mathrm{d}} = \dfrac{(3.75-2)\,\mathrm{mA}}{(1.5-0.35)\,\mathrm{V}} = 1.5\ \mathrm{mS} \Rightarrow A = \dfrac{g_m}{g_d} = -1.3$

(b) $g_{\mathrm{m}} = 0 \Rightarrow A = \dfrac{g_m}{g_d} = 0$

(c) $g_{\mathrm{m}} = -\dfrac{(4.25-2)\,\mathrm{mA}}{(1.8-0.7)\,\mathrm{V}} = 2\ \mathrm{mS} \quad g_{\mathrm{d}} = \dfrac{(4.75-2)\,\mathrm{mA}}{(1.5-0.65)\,\mathrm{V}} = 3.2\ \mathrm{mS} \Rightarrow A = \dfrac{g_m}{g_d} = 0.6 < 1$

The best gain case is (a) because the operating point is in the quasi-saturation regime. The worst case is (b) because the operating point is at the Dirac point.

(d) $V_{\mathrm{GS}} = 0$ V, $V_{\mathrm{DS}} = 0.5$ V, $I_{\mathrm{D}} = 1.75$ mA

(e) $A_{\mathrm{v}} = -A\dfrac{R_{\mathrm{L}}}{R_{\mathrm{L}} + r_d} = 0.18$

$$A = \frac{g_m}{g_d} = -0.36$$

$$g_{\mathrm{m}} = \frac{(2.5-1)\,\mathrm{mA}}{(0.6+0.6)\,\mathrm{V}} = -1.25\ \mathrm{mS}$$

$$g_{\mathrm{d}} = \frac{(3-0.75)\,\mathrm{mA}}{(0.85-0.2)\,\mathrm{V}} = 3.5\ \mathrm{mS} \Rightarrow r_d = 286\,\Omega = R_{\mathrm{L}}$$

A_{v} is reduced because R_{L}

- moves the operating point into the ohmic regime which increases g_{d},
- reduces V_{DS} which decreases g_{m}, and
- introduces the attenuation in the output part of the circuit, $R_{\mathrm{L}}/(R_{\mathrm{L}} + r_{\mathrm{d}}) = 1/2$.

(f) $V_{\mathrm{DD}} = V_{\mathrm{DS}} + R_{\mathrm{L}} I_{\mathrm{D}} = 1\ \mathrm{V} + 286\,\Omega \times 3\ \mathrm{mA} = 1.86\ \mathrm{V}$

$$A_{\mathrm{v}} = -A\frac{R_{\mathrm{L}}}{R_{\mathrm{L}} + r_d} = -1.3 \times \frac{286}{286+667} = -0.39$$

$$r_{\mathrm{d}} = \frac{1}{g_{\mathrm{d}}} = 667\,\Omega$$

(g) See slide 96 of the handouts.

(h) See slide 100 of the handouts.

(i) See slides 99, 103 and 105 of the handouts.

$$|h_{21}(f_{\mathrm{T}})| = \frac{|g_{\mathrm{m}}|}{2\pi f_{\mathrm{T}} C_{\mathrm{G}}} = 1 \Rightarrow f_{\mathrm{T}} = \frac{1}{2\pi}\frac{|g_{\mathrm{m}}|}{C_{\mathrm{G}}} = 7.4\ \mathrm{GHz}$$

$$C_{\mathrm{G}} = 6.9 \times 8.85 \cdot 10^{-12}\,\frac{3.5 \cdot 10^{-12}}{5 \cdot 10^{-9}} = 43\ \mathrm{fF}$$

(j) $f_{\mathrm{T}} = \dfrac{1}{2\pi}\dfrac{v}{L} \Rightarrow v = 2\pi L f_{\mathrm{T}} = 32.5$ km/s

$$v = \mu E = \mu\frac{V_{\mathrm{DS}}}{L} \Rightarrow \mu = \frac{vL}{V_{\mathrm{DS}}} = 22.7 \cdot 10^{-3}\,\mathrm{m}^2/(\mathrm{Vs}) = 227\ \mathrm{cm}^2/(\mathrm{Vs})$$

(k) $f_{\max} \to \infty$

(l) Slide 122 of the handouts.

(m) Slide 123 of the handouts.

$$G'(f) \approx \frac{g_{\mathrm{m}}^2}{4\omega^2 R_{\mathrm{G}} C_{\mathrm{G}}^2 g_{\mathrm{d}}} = \frac{\omega_{\mathrm{T}}^2}{\omega^2}\frac{1}{4R_{\mathrm{G}} g_{\mathrm{d}}} = \frac{f_{\mathrm{T}}^2}{f^2}\frac{1}{4R_{\mathrm{G}} g_{\mathrm{d}}}$$
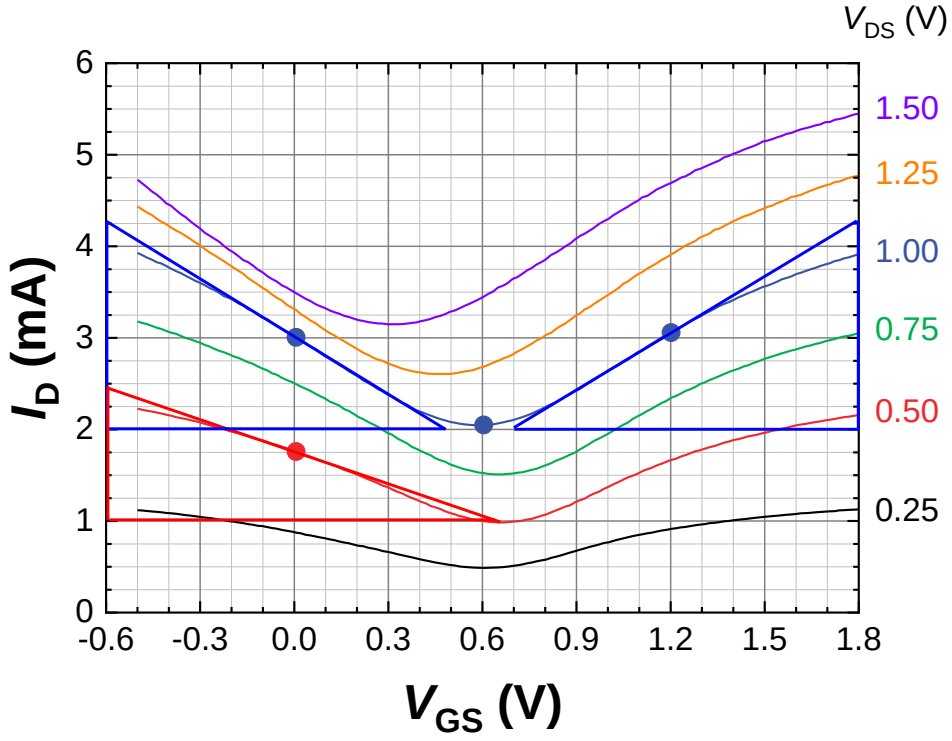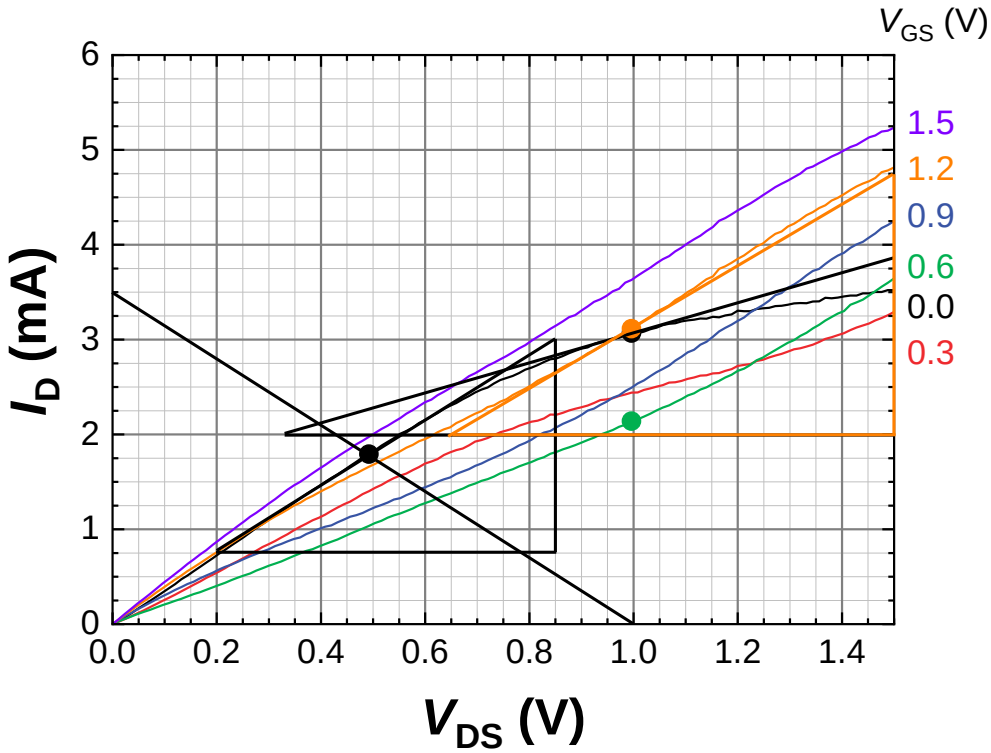
$$G'(f_{\max}) \approx \frac{f_{\mathrm{T}}^2}{f_{\max}^2}\frac{1}{4R_{\mathrm{G}} g_{\mathrm{d}}} = 1 \Rightarrow f_{\max} = \frac{f_{\mathrm{T}}}{2\sqrt{R_{\mathrm{G}} g_{\mathrm{d}}}} = 21\,\mathrm{GHz}$$